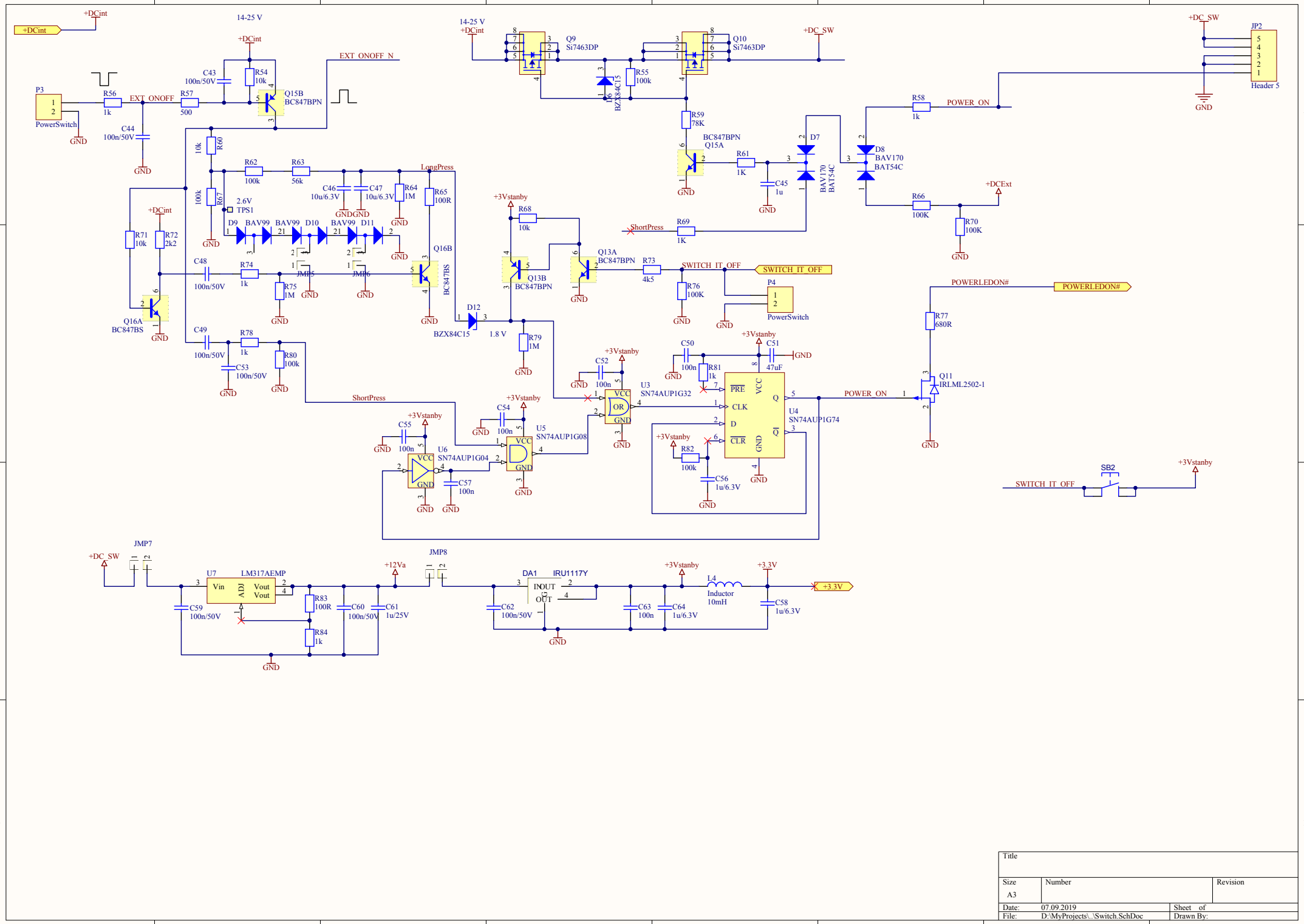
+DCint
14-25 V
EXT_ONOFF_N
EXT_ONOFF
P3
PowerSwitch
R56 1k
R57 500
C43 100n/50V
R54 10k
Q15B BC847BPN
C44 100n/50V
GND
R60 10k
R67 100k
R62 100k
R63 56k
C46 10u/6.3V
C47 10u/6.3V
R64 1M
R65 100R
LongPress
2.6V
TPS1
D9 BAV99
D10 BAV99
D11 BAV99
JMP5
JMP6
Q16B BC847BS
R71 10k
R72 2k2
Q16A BC847BS
C48 100n/50V
R74 1k
R75 1M
C49 100n/50V
R78 1k
R80 100k
C53 100n/50V
ShortPress
D12 BZX84C15
1.8 V
R79 1M
+3Vstanby
R68 10k
Q13B BC847BPN
Q13A BC847BPN
R73 4k5
SWITCH_IT_OFF
R76 100K
P4
PowerSwitch
Q9 Si7463DP
Q10 Si7463DP
+DC_SW
D6 BZX84C15
R55 100k
R59 78K
BC847BPN Q15A
R61 1K
C45 1u
D7 BAV170 BAT54C
D8 BAV170 BAT54C
R58 1k
POWER_ON
R66 100K
R70 100K
+DCExt
JP2
Header 5
POWERLEDON#
R77 680R
Q11 IRLML2502-1
C50 100n
R81 1k
C51 47uF
U3 SN74AUP1G32
U4 SN74AUP1G74
PRE
CLK
D
CLR
VCC
Q
QI
R82 100k
C56 1u/6.3V
C52 100n
C54 100n
U5 SN74AUP1G08
C55 100n
U6 SN74AUP1G04
C57 100n
SB2
JMP7
U7 LM317AEMP
Vin
ADJ
Vout
R83 100R
R84 1k
C59 100n/50V
C60 100n/50V
C61 1u/25V
+12Va
JMP8
DA1 IRU1117Y
INOUT
OUT
C62 100n/50V
C63 100n
C64 1u/6.3V
L4 Inductor 10mH
C58 1u/6.3V
+3.3V
Title
Size A3
Number
Revision
Date: 07.09.2019
File: D:\MyProjects\..\Switch.SchDoc
Sheet of
Drawn By: